Beam R2

IP67 Kg 0,200

TECHNICAL DATA

Application	Surface mounted (Ceiling, Wall, Floor)
Location	Outdoor
Light Source	LED
Optics	8°, 23°, 43°, 10°x41°
LED No.	3
LED Life time (L80B10)	50000 hours
Input Voltage / Current	24Vdc, 230Vac
Connection details	Parallel (supply “P”)
Installation	Surface mounted (Ceiling, Wall, Floor)
Weight	1,060Kg
Supply	24Vdc, 230Vac
Wiring	Provided with 150cm neoprene cable
Working Temperature	-10°C - +50°C

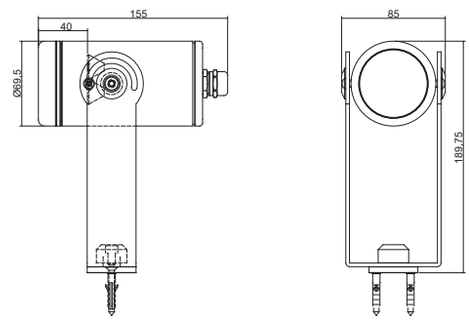

FINISHING

Materials	Anodized aluminium body and bracket
	tempered glass diffuser
Finishing	Anodized Aluminum (A), Black (B), Custom (X)
Diffuser	Tempered Glass

Family	Type	LED NO	WAT/LED	CCT	Optics	Finish	Power	Dimming	Options
BM-Beam	R2 - Round	3	1 2	27-2700K 30-3000K 40-4000K 50-5000K RD-Red GR-Green BL-Blue 22-2200K XX- Custom	8-8° 23-23° 43-43° 10°x41°	A - Anodized Aluminum B - Black X - Custom	CV - 24VDC AC - 230VAC	N - None	HCL - Honey Comb Louver SNT - Snoot

Sample: BM - R2 - 3 - 1 - 27 - 8 - A - CV - N - HCL

ACCESSORIES

SPK -Spike

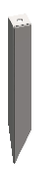

Gel Connector

5625/1121

Micro Paguro

Optional

HCL - Honey Comb Louver

SNT - Snoot